IMO Washstand fitting with electronic opening and closing function without pop-up waste - Chrome

IMO

44 521 670

- Infrared sensor technology
- 165mm projection
- height of mixer 319 mm
- height up to aerator 268 mm
- hole diameter 35 mm
- fixed spout
- max. flow 5.7 l/min
- rectangular, air-enriched flow
- suitable for thermal disinfection
- Automatic shut-off after pre-set time is reached
- Indirect temperature control (undercounter)
- Control box included
- Adjustable sensor detection range
- Battery or plug-in power supply operated (batteries not included)
- 4x AA (1.5V) batteries required
- lead-free
- 1x screw-in M 8 x 1 pressure hose, leak-tested
- This product can help a building meet the requirements of Green Building Rating Systems, e.g. LEED®, BREEAM®, DGNB

Batteries not included

Chrome	44 521 670-00
Brushed Platinum	44 521 670-06
Platinum	44 521 670-08
Brushed Light Gold	44 521 670-27
Brushed Durabrass (23kt Gold)	44 521 670-28
Matte Black	44 521 670-33
Brushed Chrome	44 521 670-93

IMO Washstand fitting with electronic opening and closing function without pop-up waste - Chrome

44 521 670

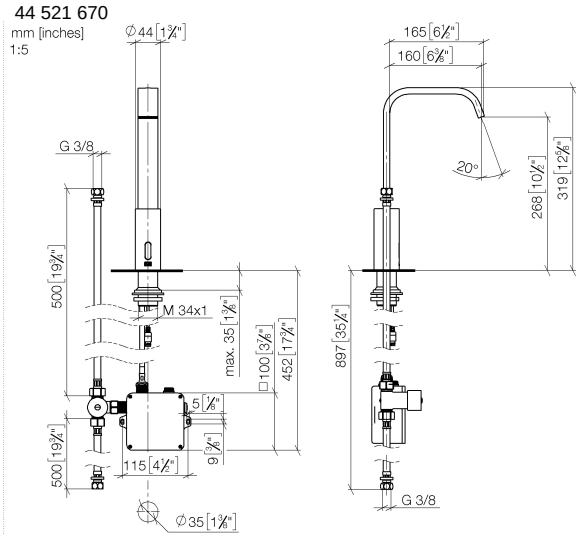

Flow rate chart

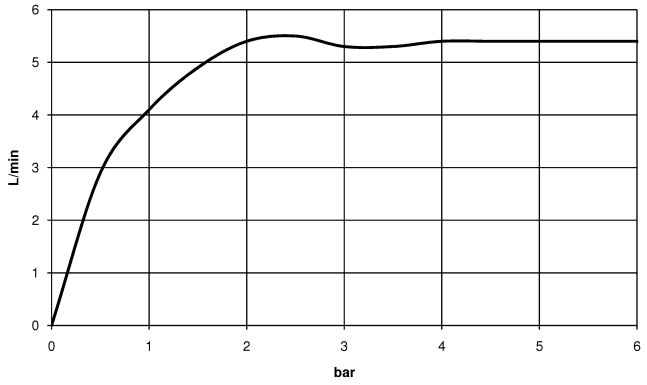

Certificates

Belgaqua_23-210-27_1.

LGA_38246.

WRAS_2211011.

IMO Washstand fitting with electronic opening and closing function without pop-up waste - Chrome

44 521 670

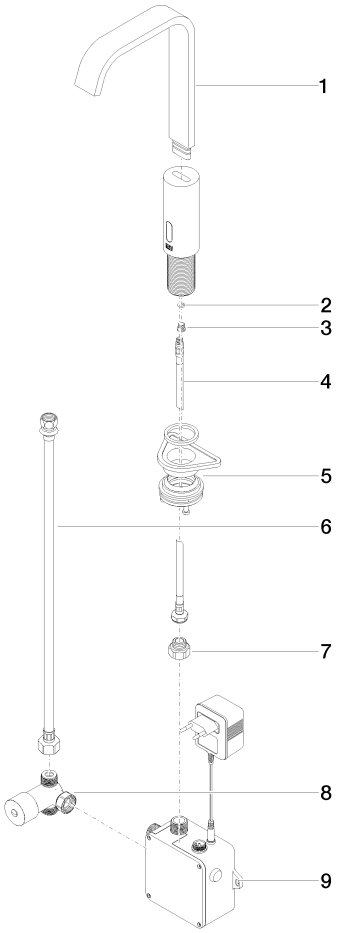

Spare parts list

No.	Item Number	Name	Quantity used	Delivery time
1	90 28 22 376 00-00	spout	1	10
2	09 14 10 132 90	seal	1	2
3	09 31 20 027 10-00	plug	1	10
4	04 30 04 100 00 90	hose	1	2
5	04 23 10 044 08 90	fixing set	1	2
6	12 506 970 90	High pressure hoses -	1	2
7	09 24 03 185-00	nipple	1	10
8	90 30 50 081 00 90	valve	1	2
9	90 10 01 247 00 90	valve box	1	10

We reserve the right to change designs, product range and technical specifications without prior notice.
More information can be found at: www.dornbracht.com +49 (0) 2371 8899 900 mail@dornbracht.com